Assembly Instructions

Intersection Connection

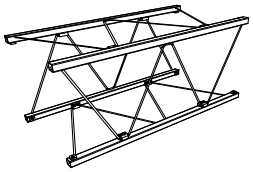

STOWaway®

PATENT PENDING.

Folding Truss System

SQX21

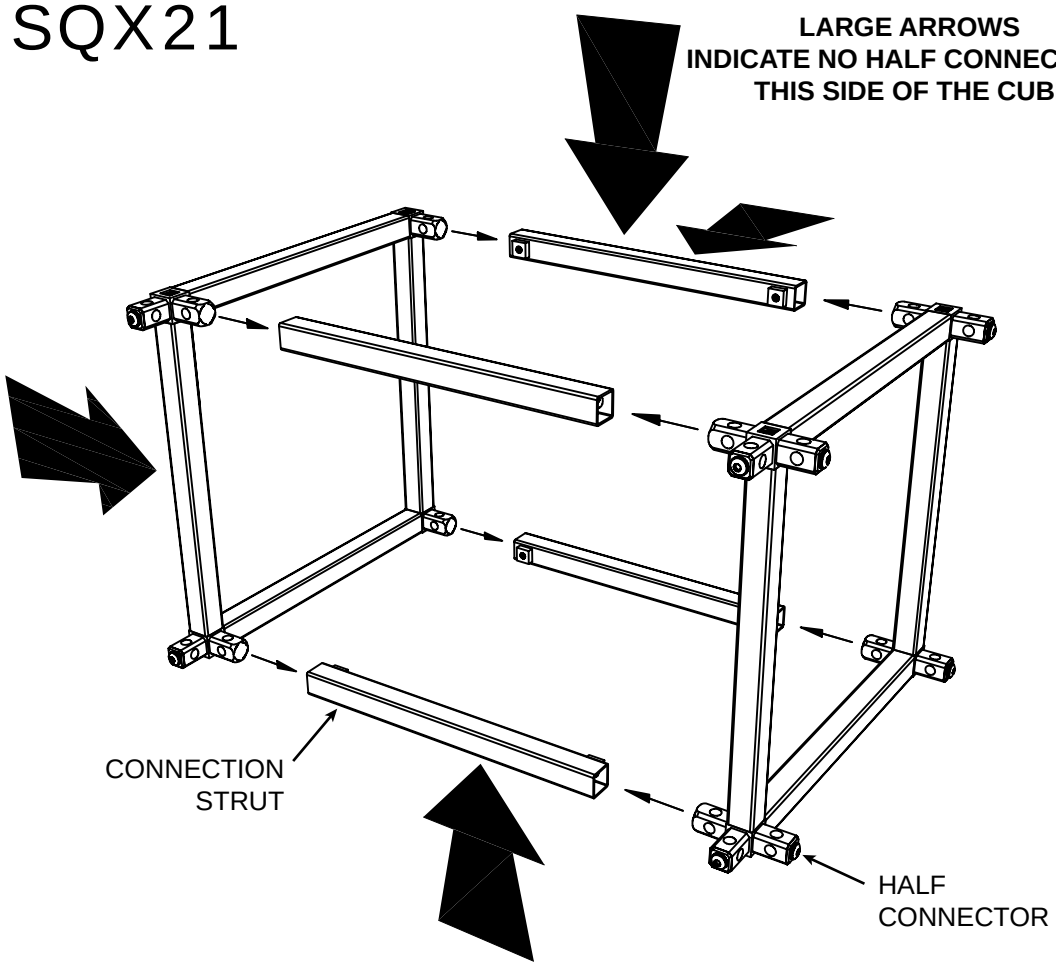

Step 1:

The diagram to the left depicts the correct orientation of the **SQX21** intersection. The first thing to consider when assembling the intersection is that the orientation of the **Half Connectors** is critical. If the intersection is not assembled in the correct orientation there will not be enough **Half Connectors** in the correct location.

Note: If the intersection has already been assembled and the orientation of the **Half Connector** is incorrect; then you must disassemble half of the intersection and reassemble it in the correct orientation.

Step 2:

When connecting the intersection turn the **Connection Struts** so the connection faces the center of the intersection. This is to give the intersection the most desirable look. Then slide the **Connector Struts** onto the first half of the the intersection.
Tip: If the Connection Strut does not engage easily then loosen the set screw.

Step 3:

Lightly tighten the **Set Screws** so the connection does not disengage. Then repeat the process for the second half of the intersection.

Step 4:

Once both halves are together tighten all **Set Screws** with **5/32 Hex Key** provided.

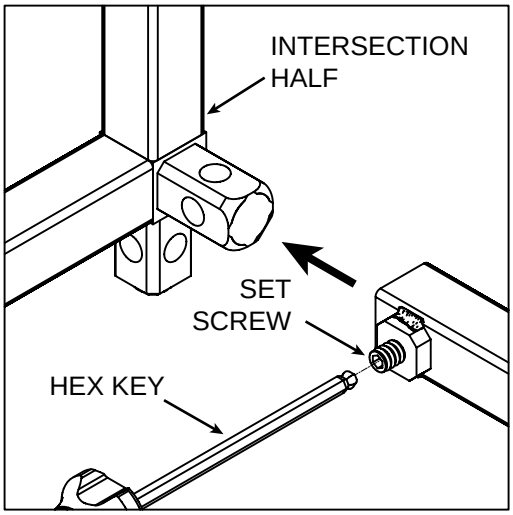

42978

11/26/03

INTERLOCK®

Interlock Structures International, Inc.

Member

7316 Aspen Lane North
Minneapolis MN 55428-1109

e mail: info@interlockstructures.com
web: www.interlockstructures.com

voice: 763.425.1464
800.468.1497
fax: 763.425.8205